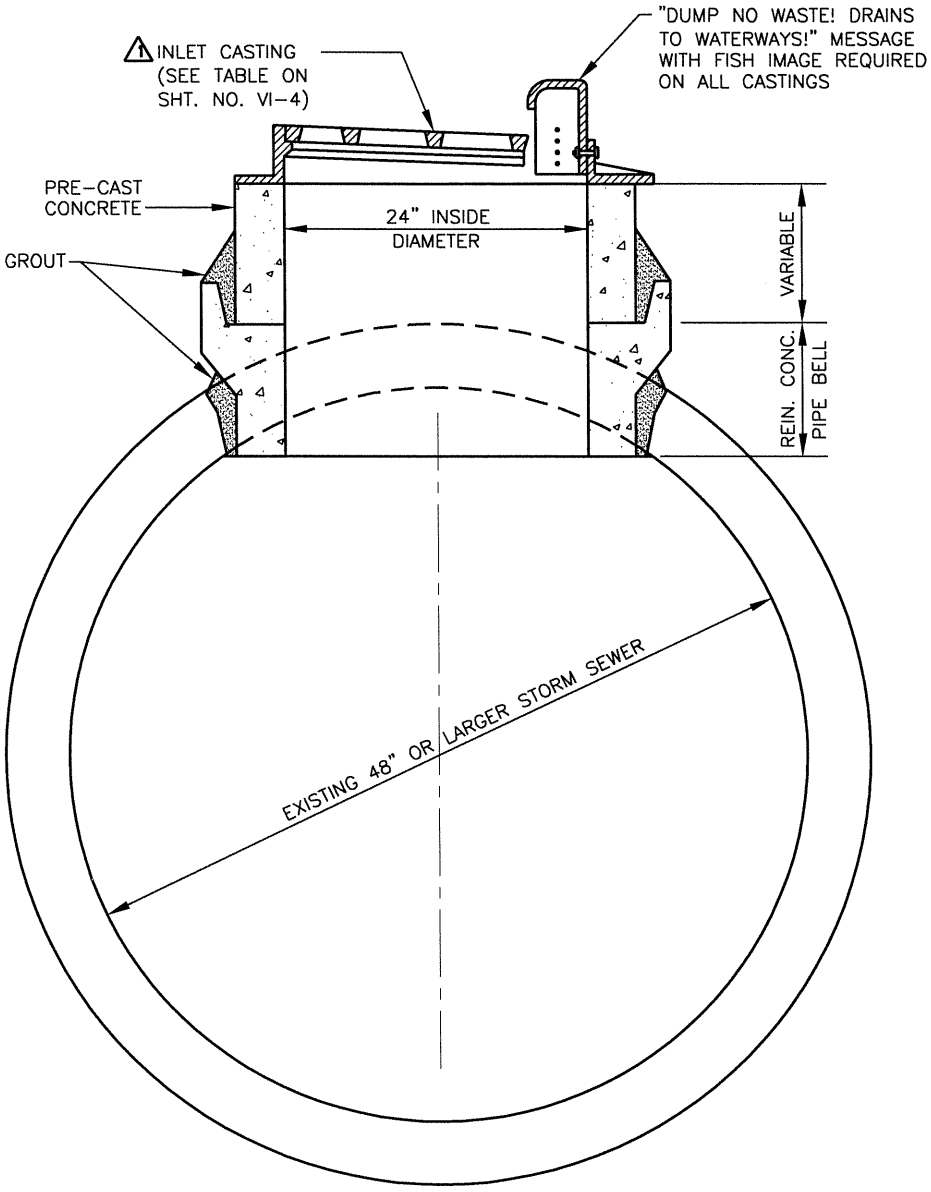

INLET TYPE "V"

NOTE:
MINIMUM OF 1/2" CEMENT MORTAR SHALL BE UTILIZE TO SEAL EACH JOINT BETWEEN FRAME AND MANHOLE CASTING OR RISERS. (TYPICAL ON ALL MANHOLES AND INLETS).

PREPARED BY: DLZ INDIANA, LLC

BRIAN K. ARTERBERY REGISTERED No. 19800103 STATE OF INDIANA PROFESSIONAL ENGINEER

11/1/07

APPROVED/REVISED BY THE BOARD OF PUBLIC WORKS & SAFETY
EFFECTIVE DATE: APRIL 2007

ITEM	REVISION	APPROVED DATE
1	REVISED CASTING INFORMATION	11-1-07

CITY OF MISHAWAKA, INDIANA

ENGINEERING STANDARDS

TYPE "V" MANHOLE

SHT. NO. VI-1

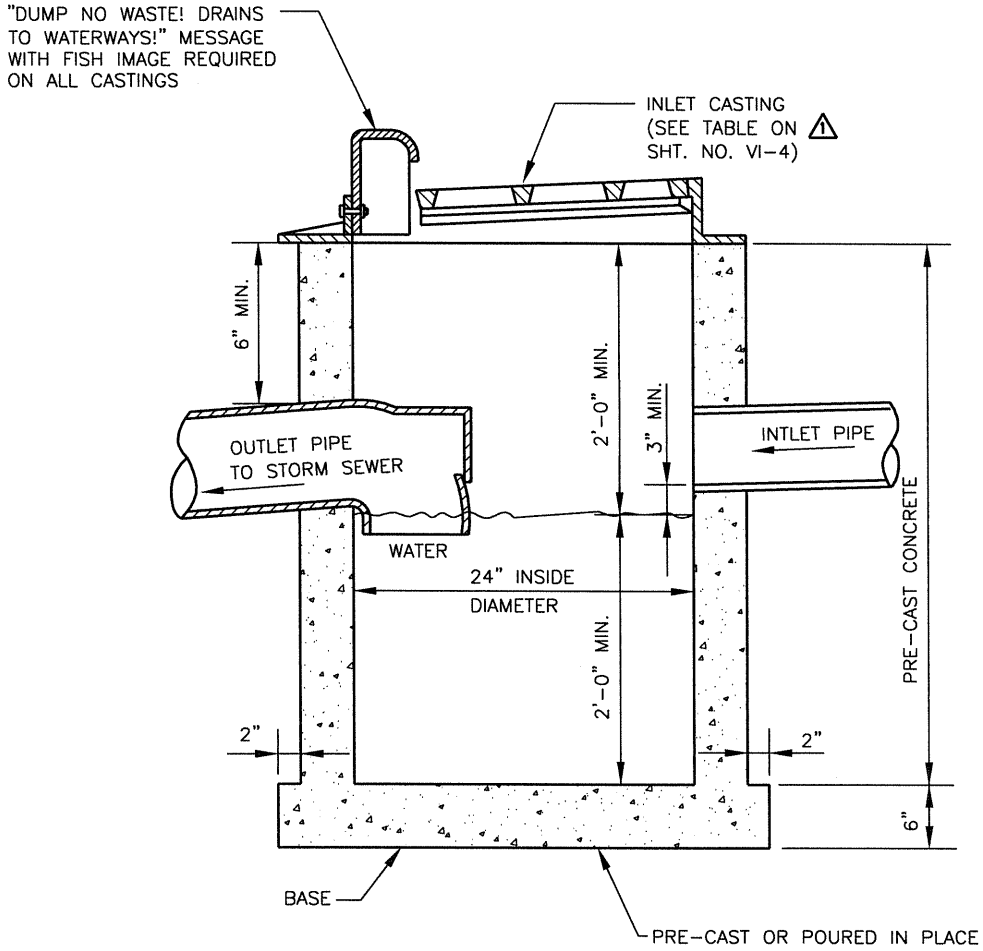

CATCH BASIN

NOTE:
MINIMUM OF 1/2" CEMENT MORTAR SHALL BE UTILIZE TO SEAL EACH JOINT BETWEEN FRAME AND MANHOLE CASTING OR RISERS. (TYPICAL ON ALL MANHOLES AND INLETS).

⚠ HIGH VOLUME/MAJOR THOROUGHFARE
HYDRAULIC CALCULATIONS FOR HIGH VOLUME / MAJOR THOROUGHFARE ROADWAYS MAY REQUIRE THE USE OF INDOT STANDARD CATCH BASINS, TYPE J, WITH TYPE 10 (NEENAH R-3287-10V) CASTINGS AS APPROVED BY CITY ENGINEER.

PREPARED BY: DLZ INDIANA, LLC

BRIAN K. ARTERBERY REGISTERED No. 19800103 STATE OF INDIANA PROFESSIONAL ENGINEER

B. K. Arterberry 11/1/07

APPROVED/REVISED BY THE BOARD OF PUBLIC WORKS & SAFETY
EFFECTIVE DATE: APRIL 2007

ITEM	REVISION	APPROVED DATE
⚠	REVISED CASTING INFORMATION & ADDED NOTE	11-1-07

CITY OF MISHAWAKA, INDIANA

ENGINEERING STANDARDS

CATCH BASIN

SHT. NO. VI-2

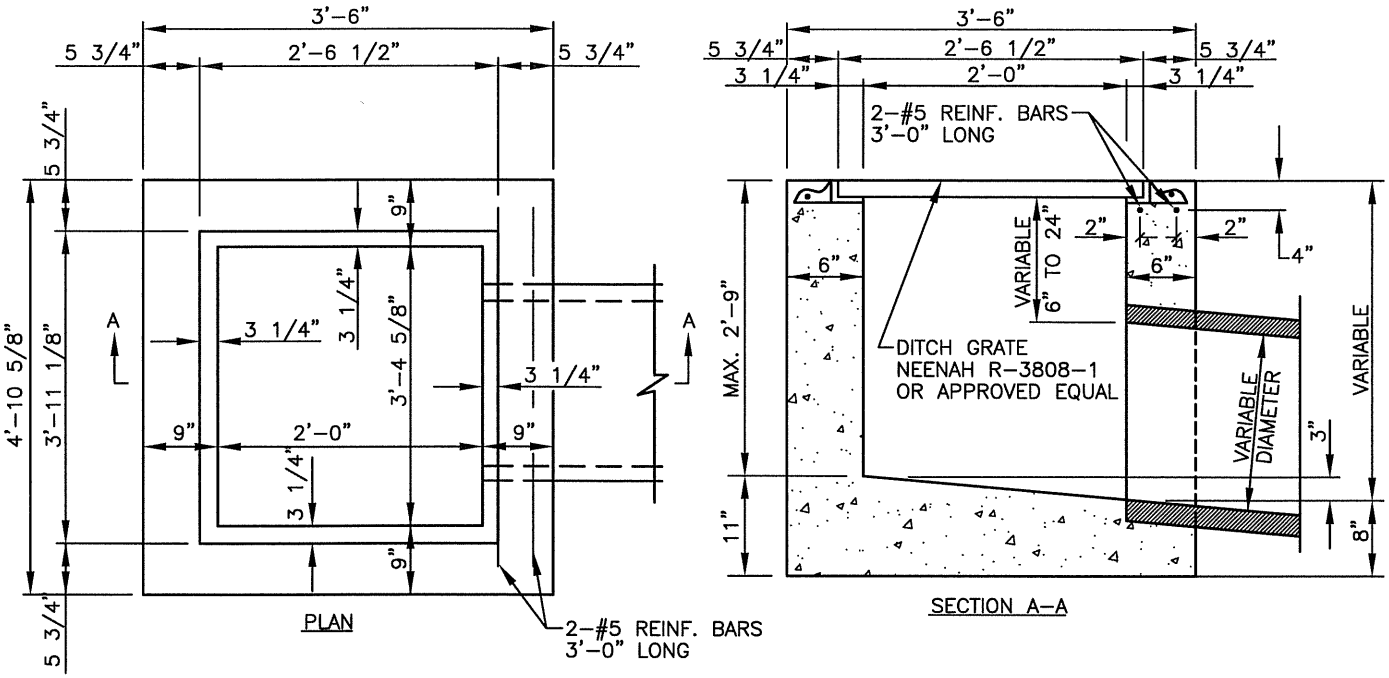

INLET TYPE "E" (CONC.)

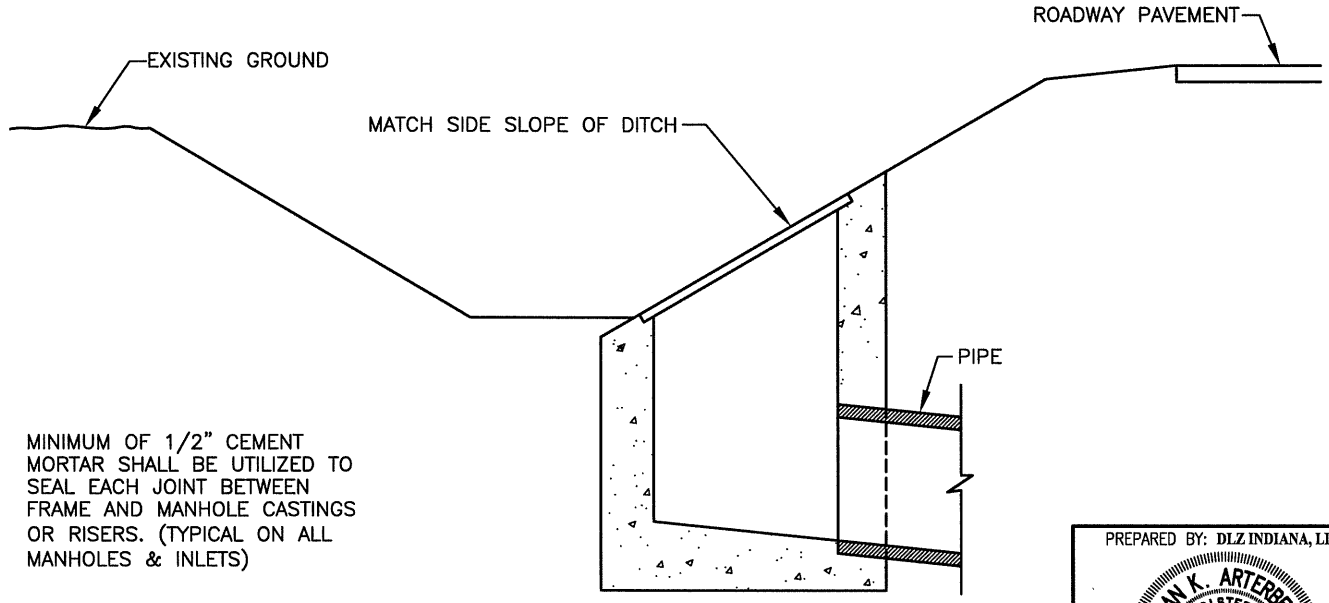

MINIMUM OF 1/2" CEMENT MORTAR SHALL BE UTILIZED TO SEAL EACH JOINT BETWEEN FRAME AND MANHOLE CASTINGS OR RISERS. (TYPICAL ON ALL MANHOLES & INLETS)

TYPICAL DITCH INSTALLATION
INLET TYPE "E"

PREPARED BY: DLZ INDIANA, LLC

BRIAN K. ARTERBERY
REGISTERED
No. 19800103
STATE OF INDIANA
PROFESSIONAL ENGINEER

4/23/07

APPROVED/REVISED BY THE BOARD OF PUBLIC WORKS & SAFETY
EFFECTIVE DATE: APRIL 2007

ITEM	REVISION	APPROVED DATE

CITY OF MISHAWAKA, INDIANA

ENGINEERING STANDARDS

TYPE "E" INLET

SHT. NO.
VI-3

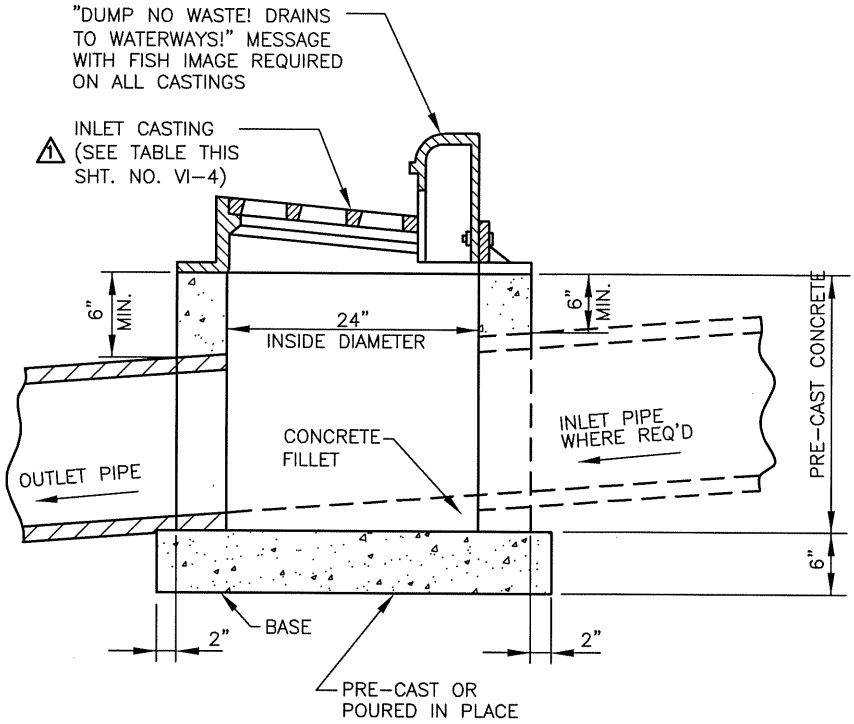

STANDARD INLET

1 HIGH VOLUME/MAJOR THOROUGHFARE

HYDRAULIC CALCULATIONS FOR HIGH VOLUME / MAJOR THOROUGHFARE ROADWAYS MAY REQUIRE THE USE OF INDOT STANDARD INLETS, TYPE J OR M, WITH TYPE 10 (NEENAH R-3287-10V) CASTINGS AS APPROVED BY CITY ENGINEER.

APPROVED INLET CASTINGS(1)

1

COMB. CONC. CURB & GUTTER	NEENAH R-3031-B
COMB. CONC CURB & GUTTER TYPE "A" (ROLL)	NEENAH R-3501-N EJIW 7490-M1
COMB. CONC. CURB & GUTTER TYPE "C" (8")	NEENAH R-3031-B
NOTES: (1) OTHER INLET CASTINGS MAY BE ACCEPTABLE AS APPROVED BY CITY ENGINEER.	

PREPARED BY: DLZ INDIANA, LLC

BRIAN K. ARTERBERY REGISTERED No. 19800103 STATE OF INDIANA PROFESSIONAL ENGINEER

11/1/07

APPROVED/REVISED BY THE BOARD OF PUBLIC WORKS & SAFETY
EFFECTIVE DATE: APRIL 2007

ITEM	REVISION	APPROVED DATE
1	REVISED CASTING TABLE & ADDED NOTE	11-1-07

CITY OF MISHAWAKA, INDIANA

ENGINEERING STANDARDS

INLET

SHT. NO. VI-4

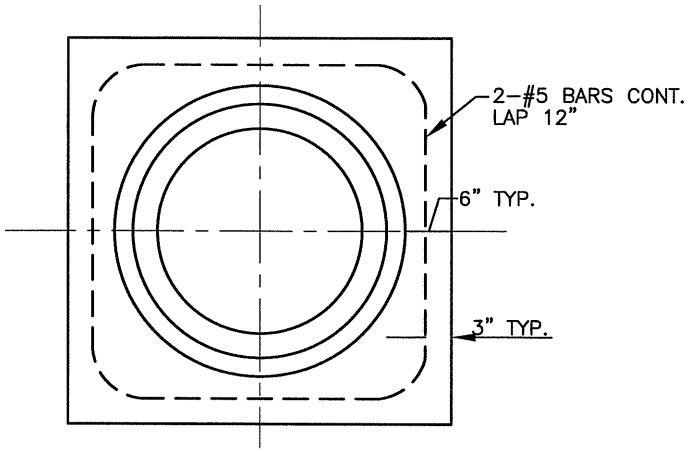

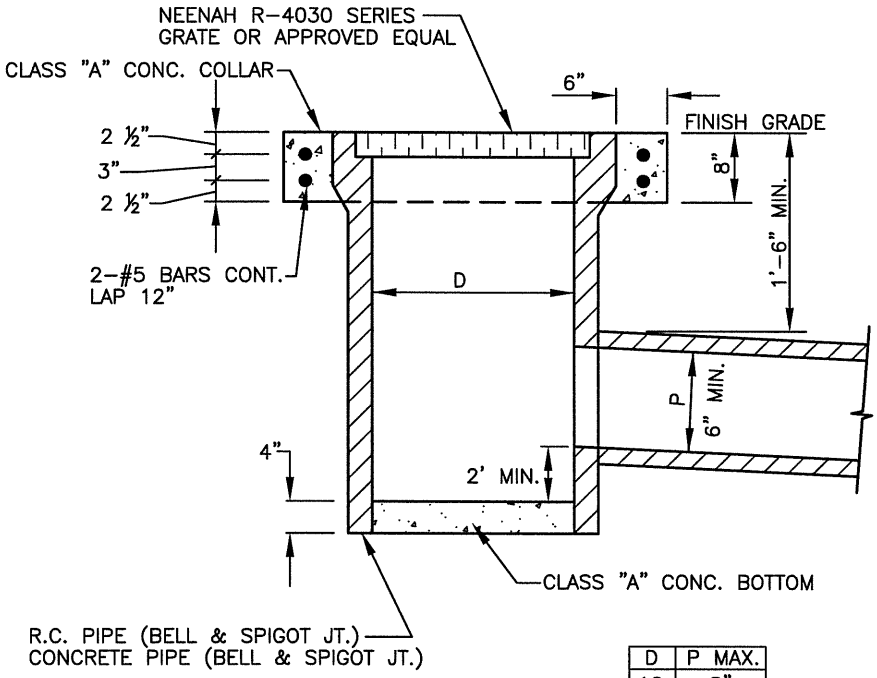

D	P MAX.
12	8"
15	10"
18	12"
24	12"

PIPE CATCH BASIN

CLASS "A" CONCRETE IN COLLAR
AND BOTTOM TO BE INCLUDED
USE AS APPROVED BY CITY ENGINEER

PREPARED BY: DLZ INDIANA, LLC

BRIAN K. ARTERBERY
REGISTERED
No. 19800103
STATE OF INDIANA
PROFESSIONAL ENGINEER

4/23/07

APPROVED/REVISED BY THE BOARD OF PUBLIC WORKS & SAFETY
EFFECTIVE DATE: APRIL 2007

ITEM	REVISION	APPROVED DATE

CITY OF MISHAWAKA, INDIANA

ENGINEERING STANDARDS

PIPE CATCH BASIN

SHT. NO.
VI-5

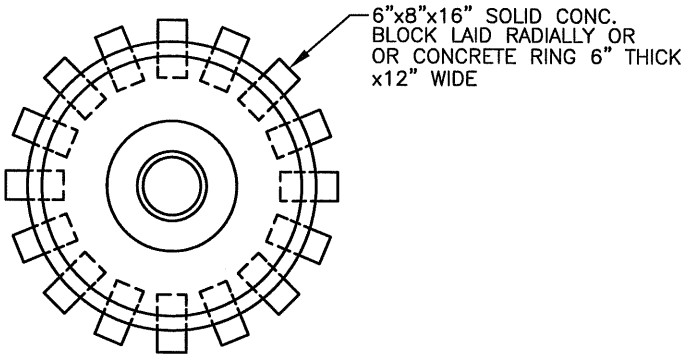

PLAN

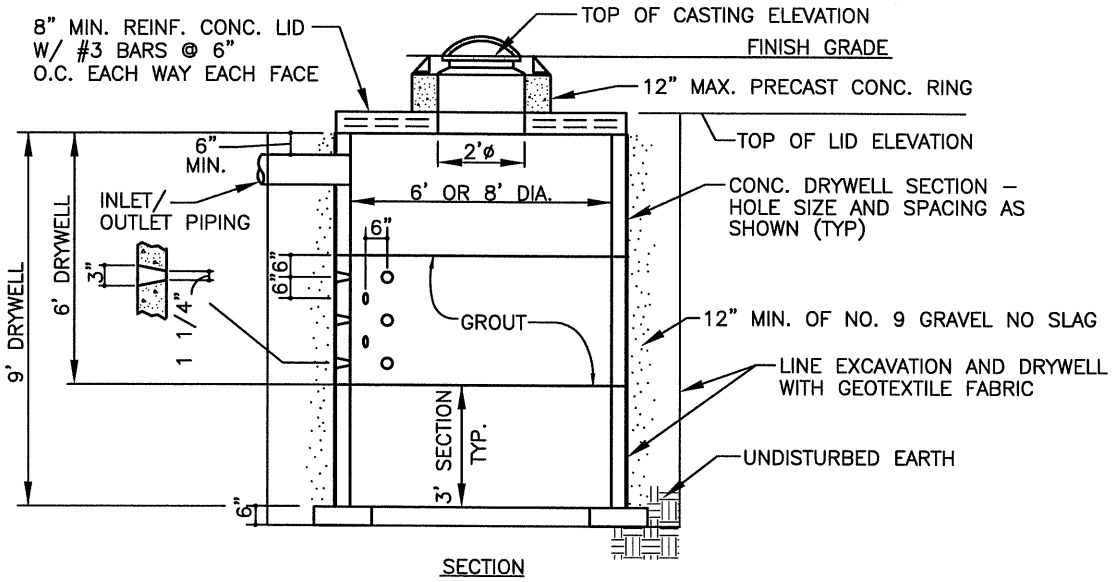

SECTION

NOTE:

1. A LAYER OF GEOTEXTILE FABRIC, PROPEX 4545 BY AMOCO OR APPROVED EQUAL SHALL BE PLACED BETWEEN THE DRYWELL AND THE NO. 9 AGGREGATE AND SHALL LINE THE EXCAVATION. ANY FABRIC JOINTS SHALL HAVE AN OVERLAP OF 18". THE NO. 9 AGGREGATE, THE GEOTECHNICAL FABRIC LAYERS AND THE FRAME AND GRATE TO BE INCLUDED IN THE COST OF THE DRYWELL.

2. AFTER INSTALLATION OF THE DRYWELLS AND BACKFILLING WITH THE NO. 9 AGGREGATE, THE CONTRACTOR WILL SURCHARGE EACH DRYWELL WITH A MINIMUM OF 3,000 GALLONS OF WATER PRIOR TO ANY PAVEMENT PLACEMENT. SURCHARGE WATER SHALL BE APPLIED AT A RATE THAT WILL COMPLETELY FILL THE DRYWELL.

3. WHERE NO CASTING IS REQ'D. PROVIDE CONCRETE REMOVABLE LID FOR THE 2' DIA. OPENING.

4. IN GRASS, AN OPEN GRATE CASTING SHALL BE NEENAH R–2561–A OR APPROVED EQUAL. IN PAVEMENT, AN OPEN GRATE CASTING SHALL BE NEENAH R–2390 OR APPROVED EQUAL. IN CURB, CASTING SHALL BE NEENAH R–3031–B, OR APPROVED EQUAL. ROLLED CURB CASTING SHALL BE NEENAH R–3501–N OR APPROVED EQUAL.

PREPARED BY: DLZ INDIANA, LLC

BRIAN K. ARTERBERY
REGISTERED
No. 19800103
STATE OF INDIANA
PROFESSIONAL ENGINEER

4/23/07

APPROVED/REVISED BY THE BOARD OF PUBLIC WORKS & SAFETY
EFFECTIVE DATE: APRIL 2007

ITEM	REVISION	APPROVED DATE

CITY OF MISHAWAKA, INDIANA

ENGINEERING STANDARDS

PRECAST PERFORATED DRYWELL

SHT. NO. VI-6

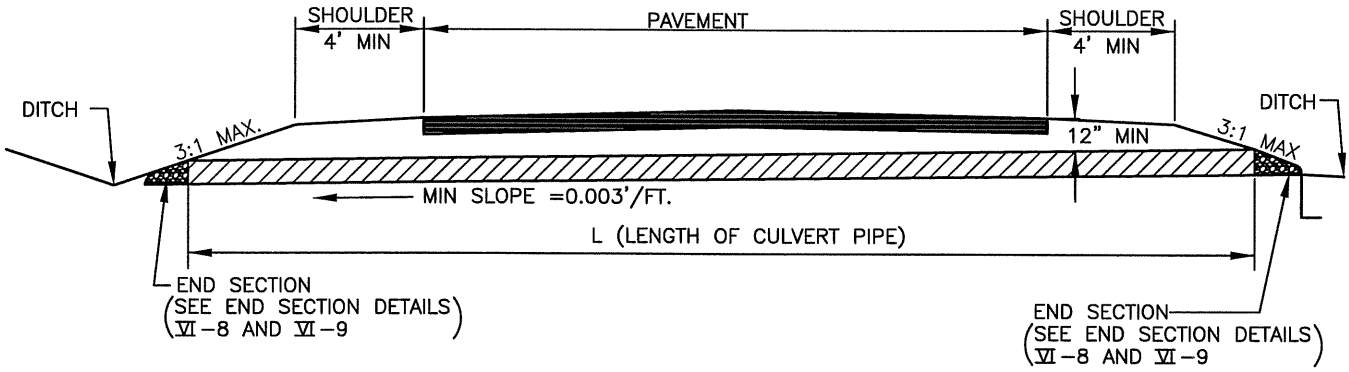

TYPICAL CULVERT INSTALLATION

NOTES

1. INSTALL MIN 15" DIA OR NECESSARY SIZE AND SLOPED DRAINAGE PATTERNS.
2. LOCATIONS UPON ENGINEERS APPROVAL ON NON-CURBED PAVEMENT SECTIONS.

PREPARED BY: DLZ INDIANA, LLC

BRIAN K. ARTERBERY
REGISTERED
No. 19800103
STATE OF INDIANA
PROFESSIONAL ENGINEER

4/23/07

APPROVED/REVISED BY THE BOARD OF PUBLIC WORKS & SAFETY
EFFECTIVE DATE: APRIL 2007

ITEM	REVISION	APPROVED DATE

CITY OF MISHAWAKA, INDIANA

ENGINEERING STANDARDS

CULVERT INSTALLATION

SHT. NO.
VI-7

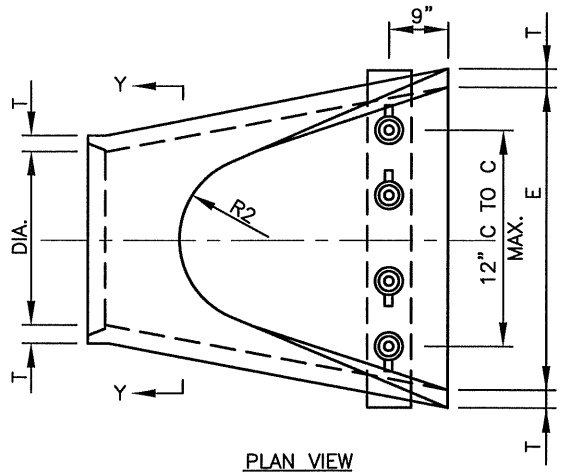

PLAN VIEW

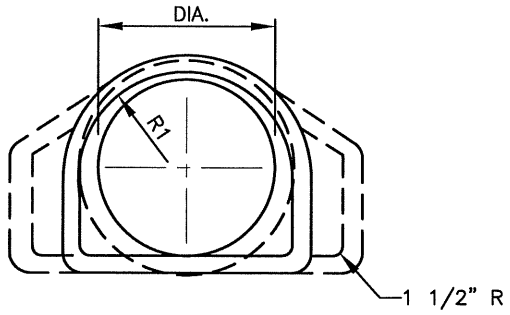

SECTION Y–Y

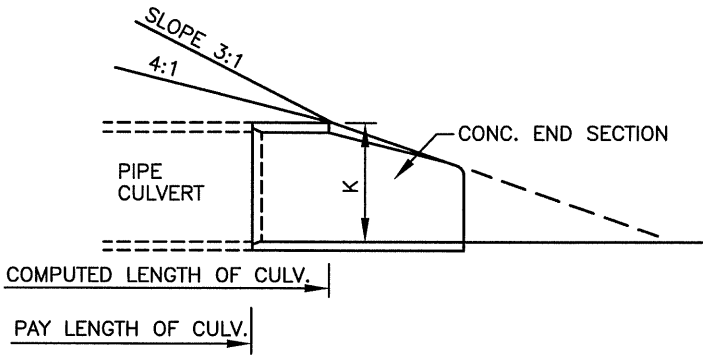

SLOPE DETAIL

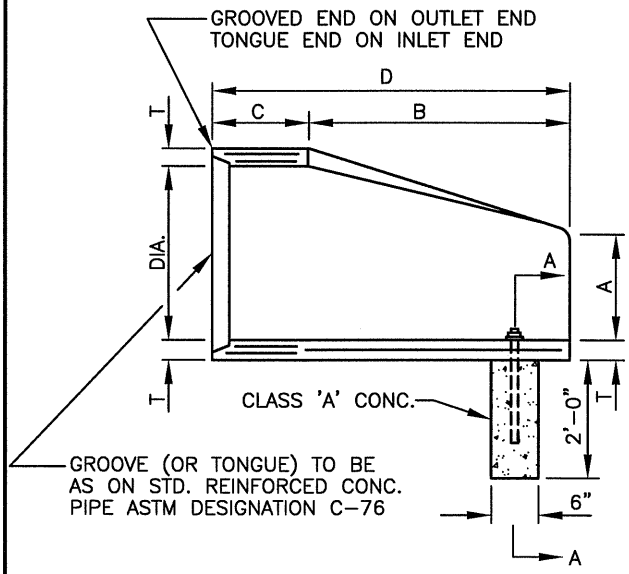

LONGITUDINAL SECTION

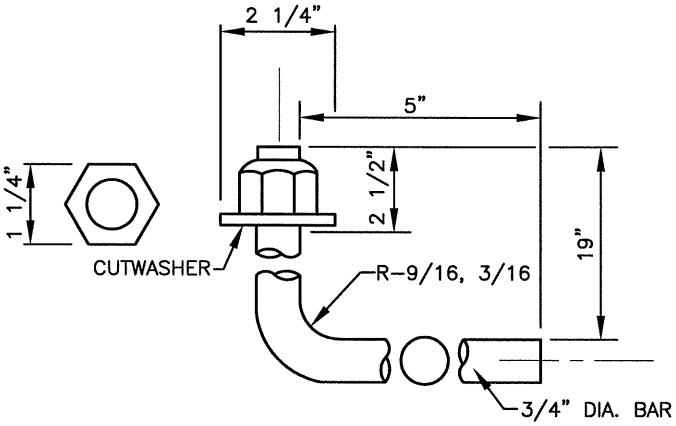

HOOK BOLT & NUT

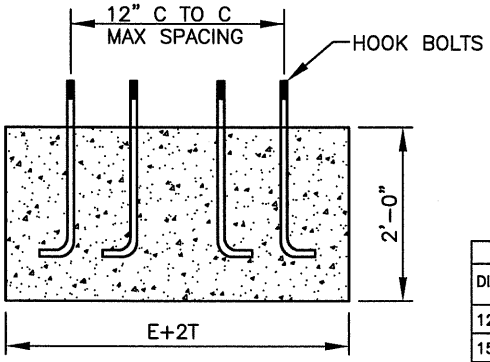

SECTION A–A

CONCRETE END SECTION

TABLE OF DIMENSIONS

DIA.	T (MIN.)	A (±1")	C (±1")	D (±1")	E (±1")	K	R1	R2	APPROX. WEIGHT lb.
12"	2"	5"	4'–3"	6'–2"	2'–0"	1.3	10 1/8"	9"	800
15"	2 1/4"	7"	4'–0"	6'–3"	2'–6"	1.5	12 1/2"	11"	1100
18"	2 1/2"	11"	4'–1"	6'–2"	3'–0"	1.8	15 1/2"	12"	1300
21"	2 3/4"	11"	3'–6"	6'–3"	3'–6"	2.1	16 1/8"	13"	1500
24"	3"	1'–0"	2'–8"	6'–3"	4'–0"	2.3	16 3/16"	14"	1800
27"	3 1/4"	1'–1"	2'–5"	6'–3"	4'–6"	2.6	18 9/16"	14 1/2"	2100
30"	3 1/2"	1'–2"	1'–10"	6'–3"	5'–0"	2.9	18 1/2"	15"	2400
33"	3 3/4"	1'–3"	3'–6"	8'–3"	5'–6"	3.1	23 3/4"	17 1/2"	4100
36"	4"	1'–5"	3'–1"	8'–3"	6'–0"	3.4	24 5/16"	20"	4200

PREPARED BY: DLZ INDIANA, LLC

BRIAN K. ARTERBERY REGISTERED No. 19800103 STATE OF INDIANA PROFESSIONAL ENGINEER

4/23/07

APPROVED/REVISED BY THE BOARD OF PUBLIC WORKS & SAFETY
EFFECTIVE DATE: APRIL 2007

ITEM	REVISION	APPROVED DATE

CITY OF MISHAWAKA, INDIANA

ENGINEERING STANDARDS

CONCRETE END SECTIONS

SHT. NO. VI-8

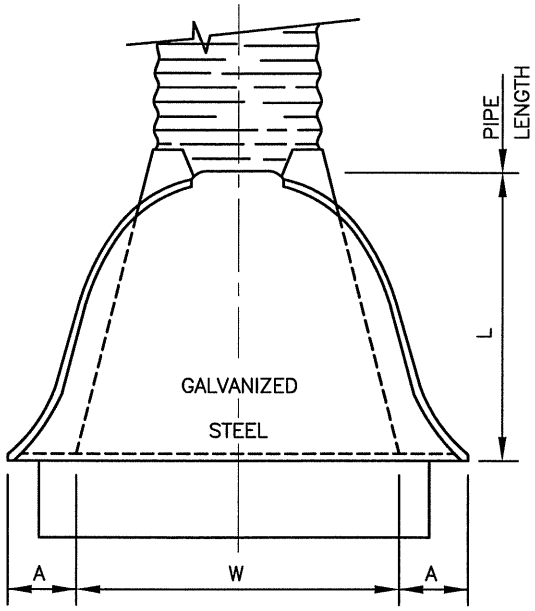

PLAN VIEW

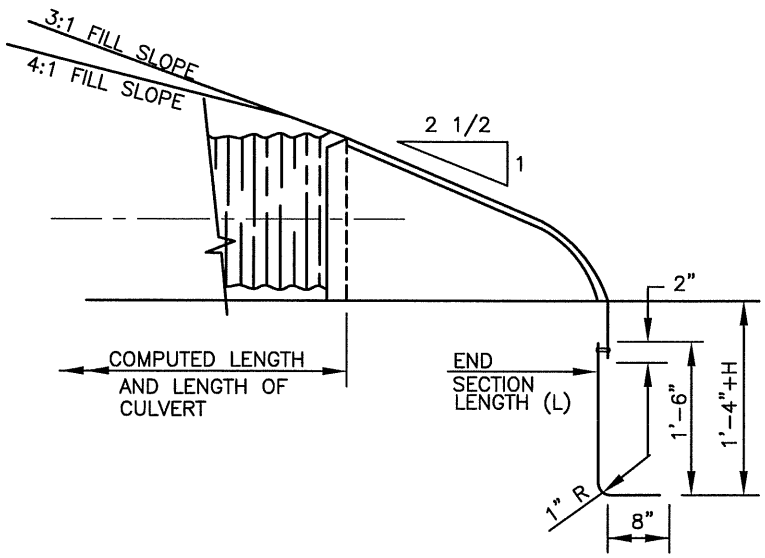

SIDE VIEW

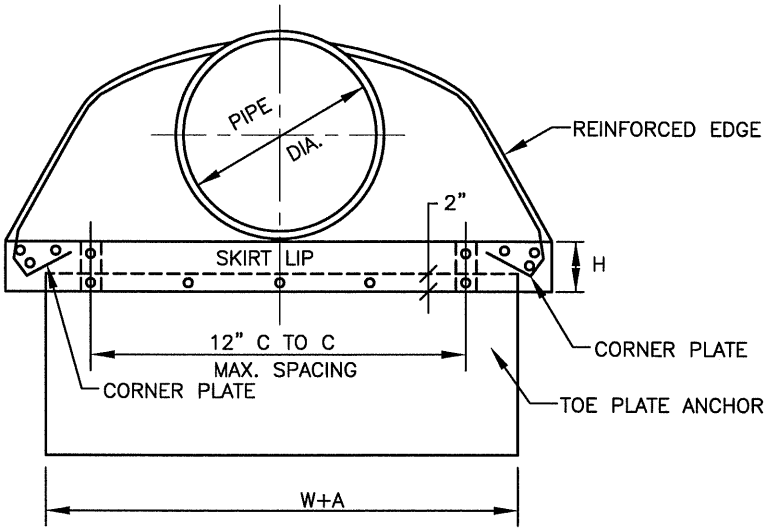

END VIEW

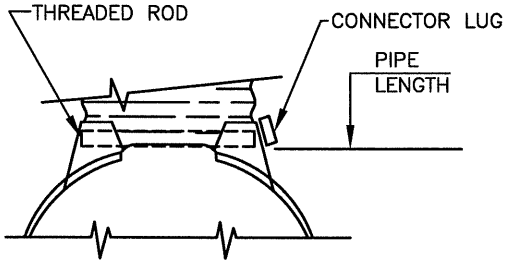

TYPE #3

FOR 12" THRU 24"

METAL END SECTION

PIPE DIA.	END SECTION THICK. (IN.)	A (±1")	B (MAX.)	H (±1")	L (±1 1/2")	W (±2")	APPROX. SLOPE	BODY
12"	.064	6"	6"	6"	21"	24"	2 1/2":1	1 PC.
15"	.064	7"	8"	6"	26"	30"	2 1/2":1	1 PC.
18"	.064	8"	10"	6"	31"	36"	2 1/2":1	1 PC.
21"	.064	9"	12"	6"	36"	42"	2 1/2":1	1 PC.
24"	.064	10"	13"	6"	41"	48"	2 1/2":1	1 PC.
30"	.079	12"	16"	8"	51"	60"	2 1/2":1	1 PC.
36"	.079	14"	19"	9"	60"	72"	2 1/2":1	2 PC.

PREPARED BY: DLZ INDIANA, LLC

BRIAN K. ARTERBERY
REGISTERED
No. 19800103
STATE OF INDIANA
PROFESSIONAL ENGINEER

4/23/07

APPROVED/REVISED BY THE BOARD OF PUBLIC WORKS & SAFETY
EFFECTIVE DATE: APRIL 2007

ITEM	REVISION	APPROVED DATE

CITY OF MISHAWAKA, INDIANA

ENGINEERING STANDARDS

METAL END SECTIONS

SHT. NO. VI-9

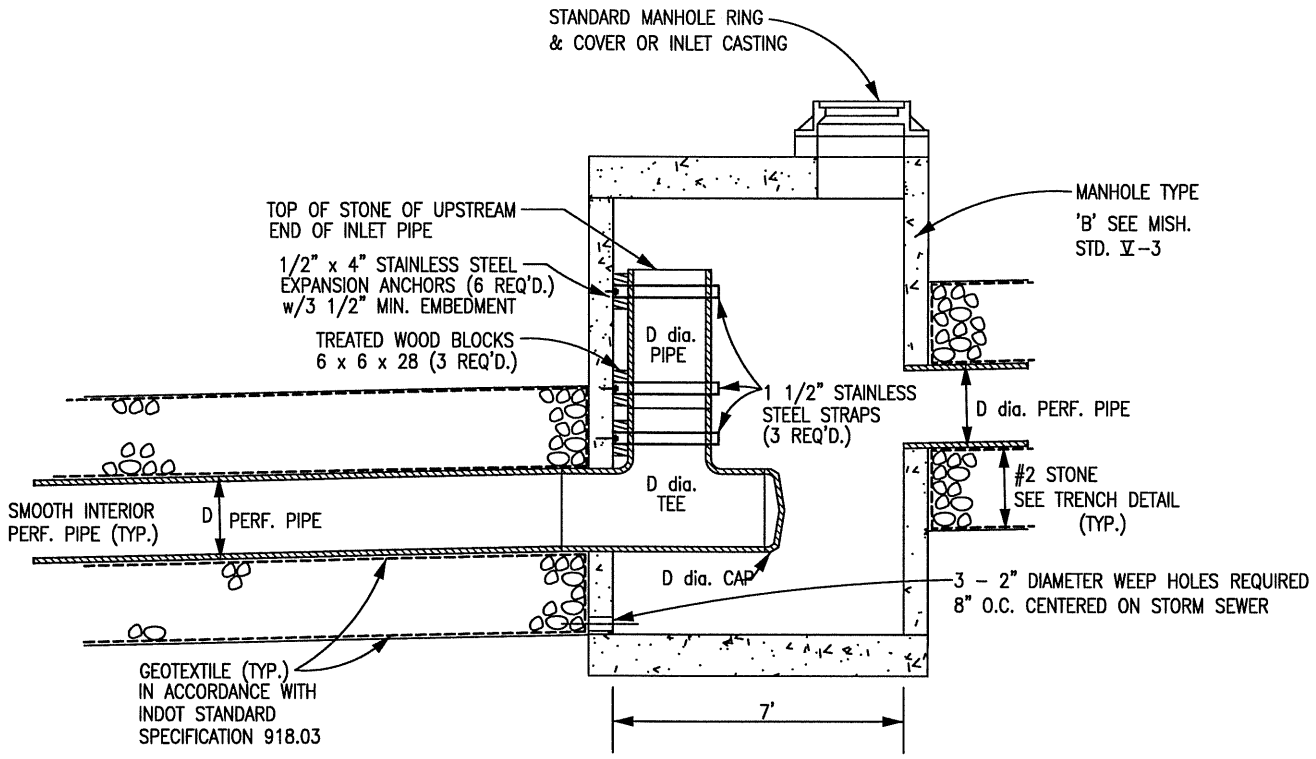

TYPE 'R' MANHOLE DETAIL
MODIFIED TYPE 'B' MANHOLE

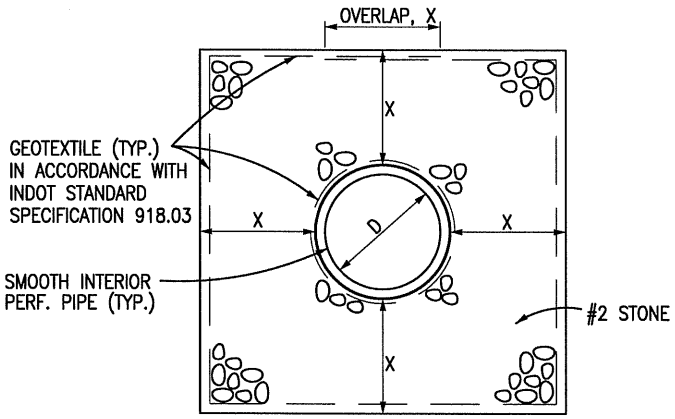

D, PIPE SIZE (IN)	X (IN)
12	12
15	15
18	18
24	24

TRENCH DETAIL

NOTE:
THIS SYSTEM IS NOT APPROVED FOR
INSTALLATION UNDER STREET PAVEMENT

PREPARED BY: DLZ INDIANA, LLC

BRIAN K. ARTERBERY
REGISTERED
No.
19800103
STATE OF
INDIANA
PROFESSIONAL ENGINEER

4/23/07

APPROVED/REVISED BY THE BOARD OF PUBLIC WORKS & SAFETY
EFFECTIVE DATE: APRIL 2007

ITEM	REVISION	APPROVED DATE

CITY OF MISHAWAKA, INDIANA

ENGINEERING STANDARDS

PERFORATED PIPE DETAIL

SHT. NO.
VI-10